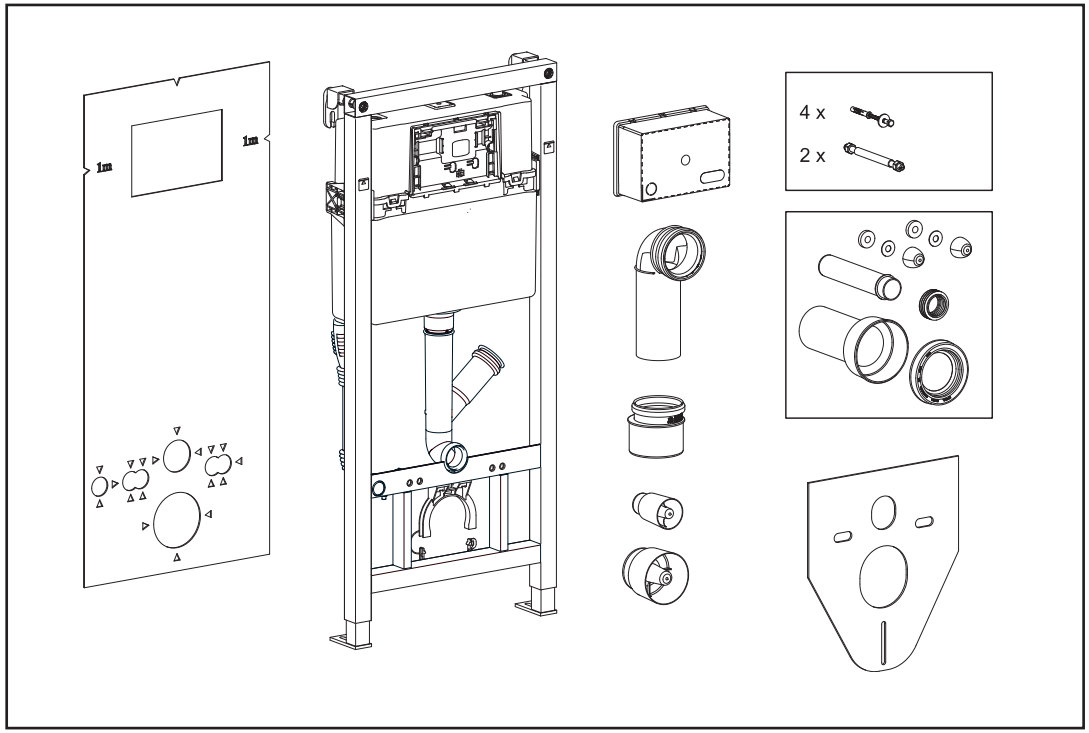

7,5 l WC element

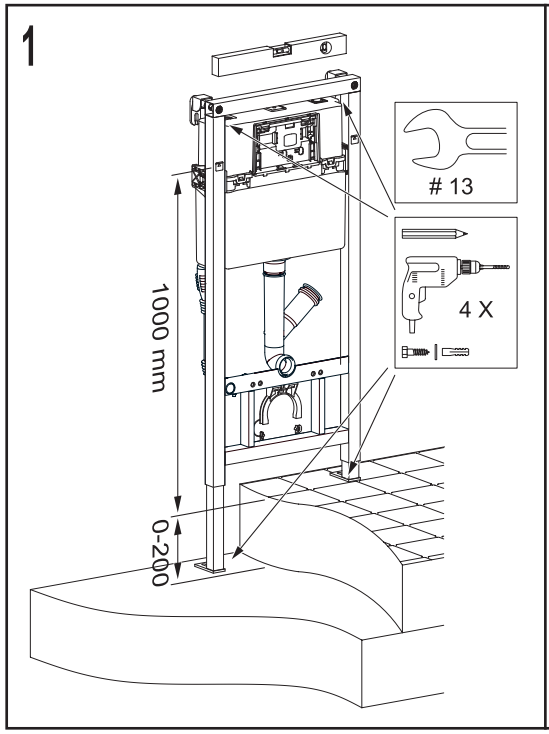

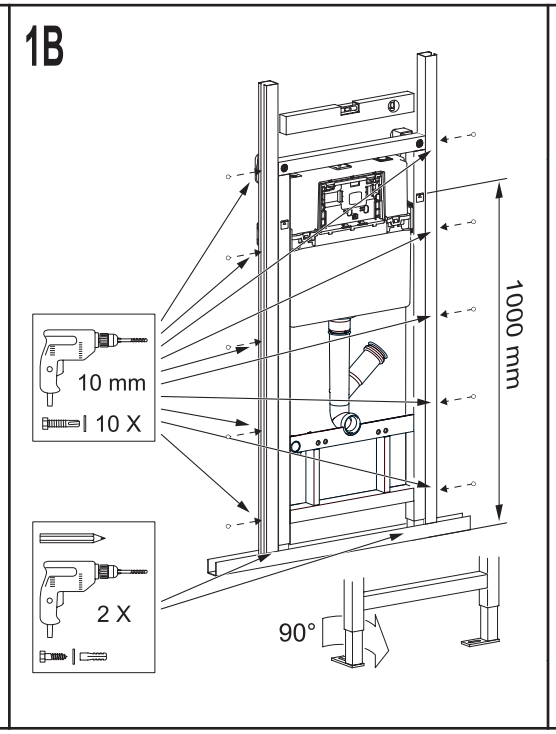

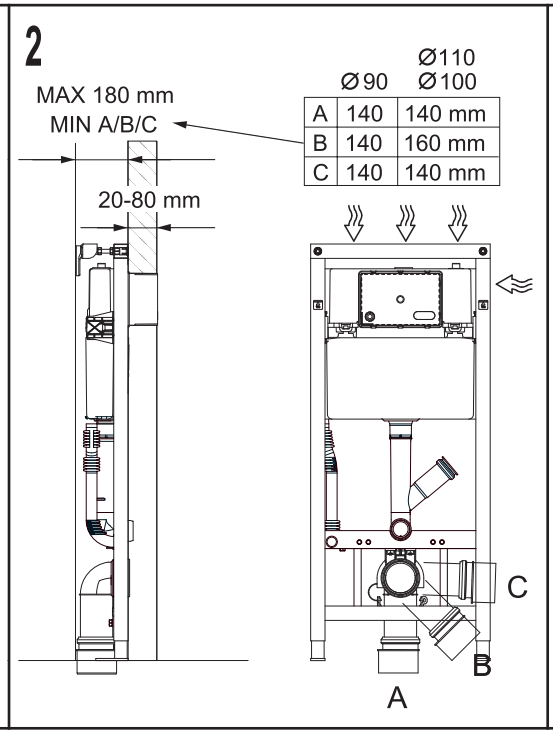

	Ø90	Ø110 Ø100
A	140	140 mm
B	140	160 mm
C	140	140 mm

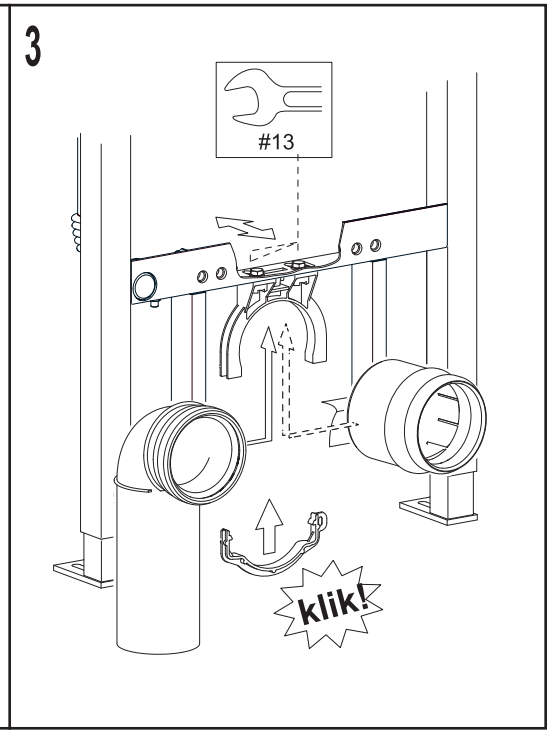

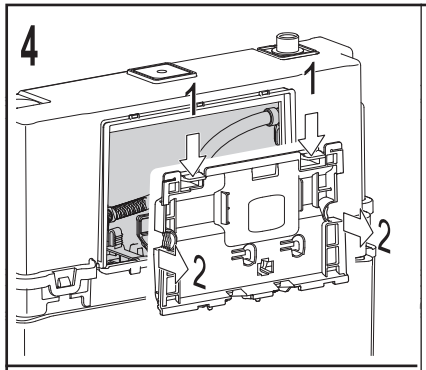

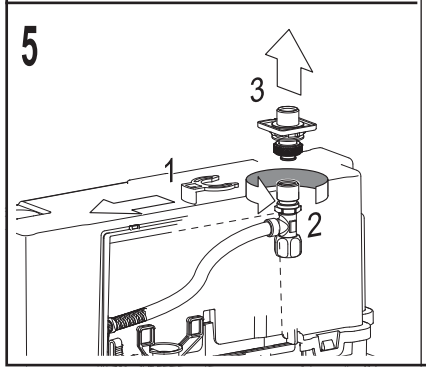

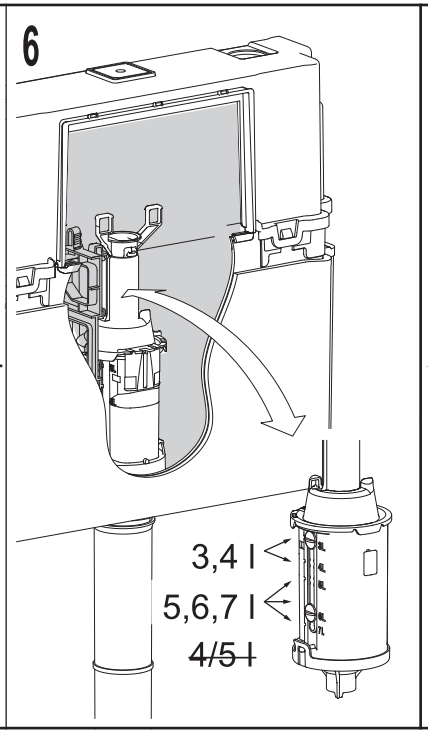

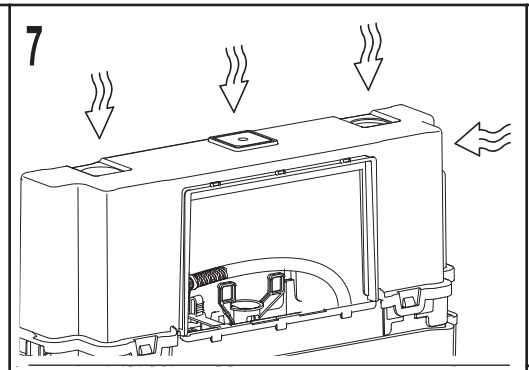

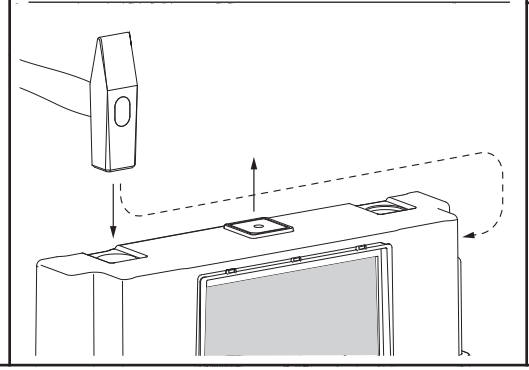

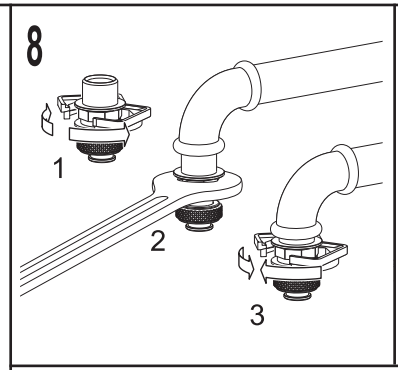

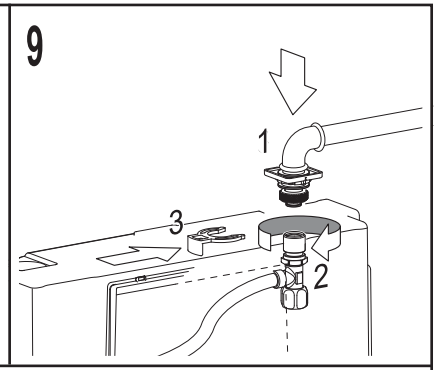

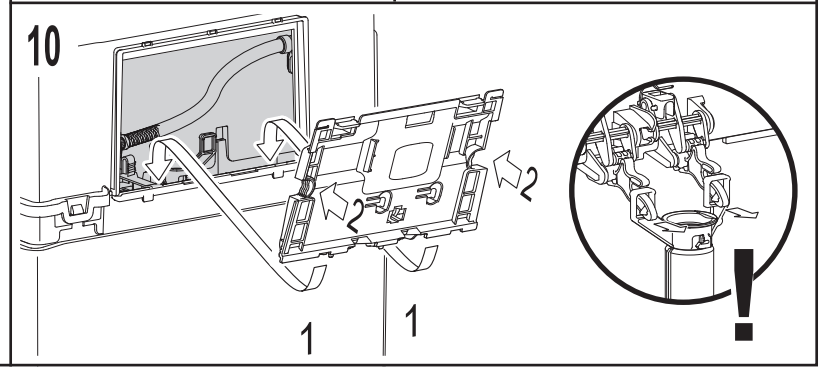

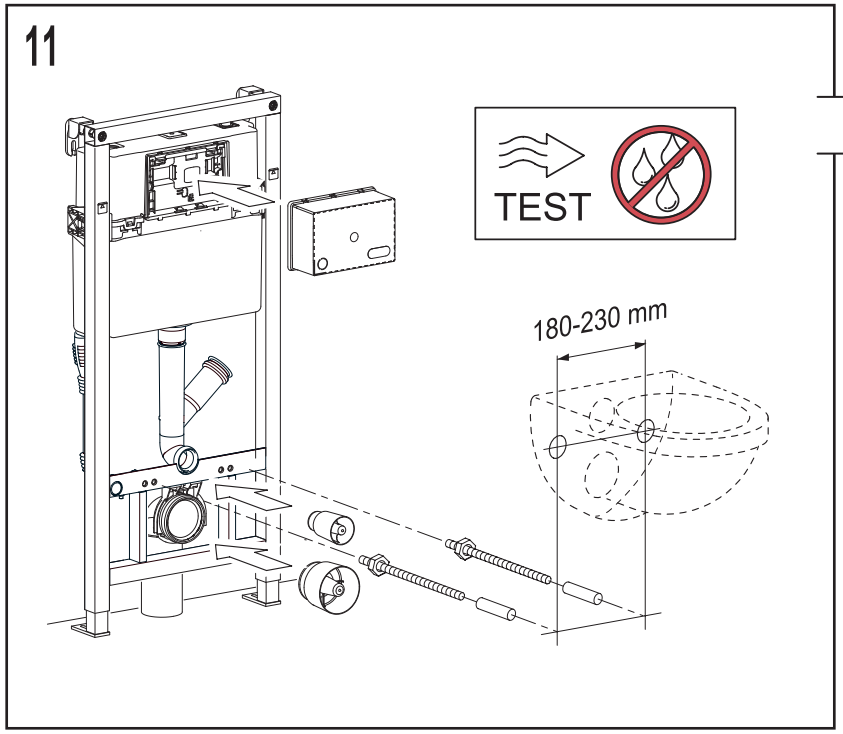

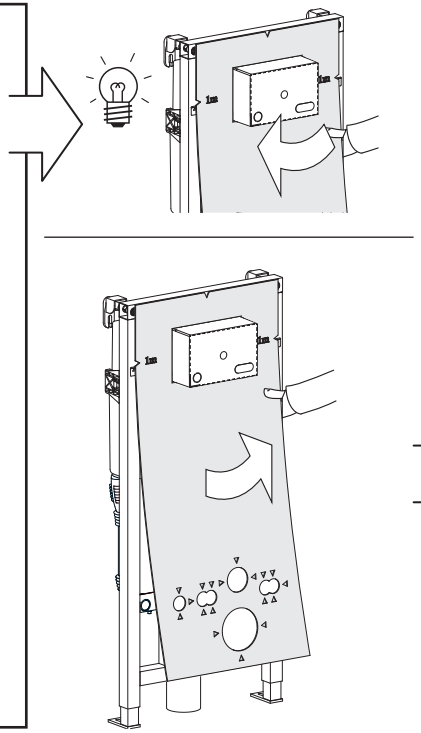

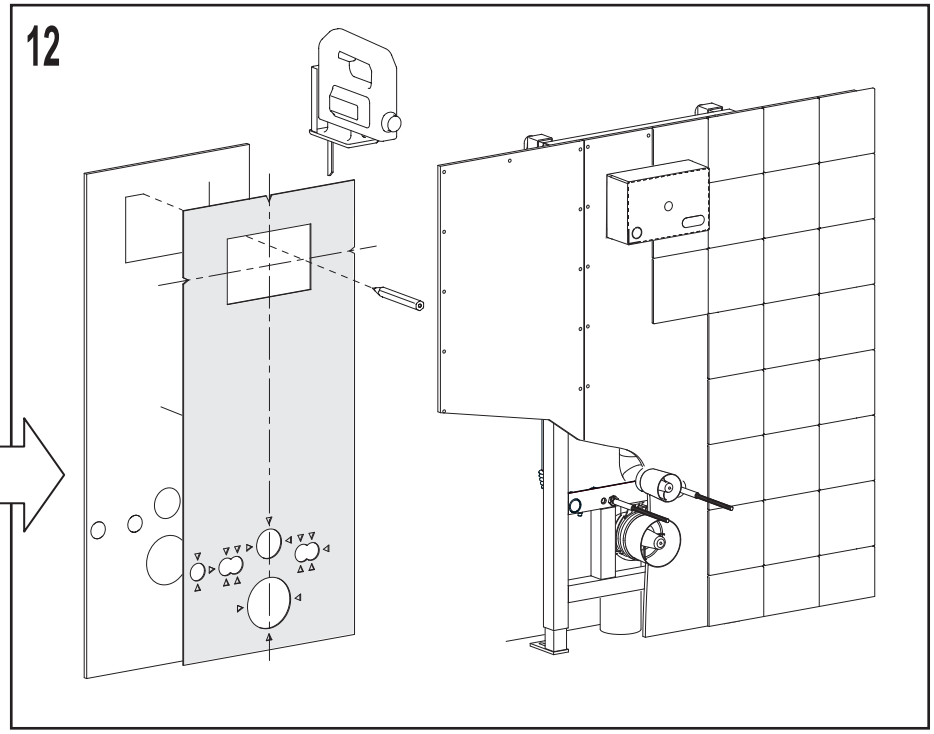

ART.NO. 5-478-196 REV 2017.09 A4, Fluidmaster d.o.o., Industrijska cesta 2, SI-6230 Postojna, @: infosl@fluidmaster.com